Mini-Circuit ZEM-4300
Mixer Tests

Test procedure

Mini-Circuits ZEM-4300 Mixer

LO/RF Frequency Range (MHz)	IF Frequency Range (GHz)	LO Drive (dBm)	Conversion Loss (Normal) (dB)	1 dB Compression Pt. (dBm)	LO/RF Isolation (Normal) (dB)	LO/IF Isolation (Normal) (dB)
300 - 4300	DC - 1000	+ 7.0	6.65	+1.0	30.0	15.0

Equipment List

Item	MFG.	Part Number	Notes
Power meter	Agilent	E4418B	Single channel
Mixer	Mini-Circuits	ZEM-4300	+ 7.0 LO
Cables	Pasternack	PE3481	6”, 18”, 36”
Signal generator	Agilent	8648D	9 kHz to 4 GHz
Power sensor	Agilent	8481A	-30 dBm to + 20 dBm
Spectrum analyzer	Agilent	8563	

Note: Use properly rated power series sensor. Using incorrect rated power sensor could damage sensor.

Duty cycle = PRF X Pulse width = 10 log (1013.5 Hz X 1.52 microseconds) = -28.12 dB

Conversion Loss

Conversion Loss (dB) = 10 log P_{RF} – 10 log P_{IF}
Where P_{RF} is the power incident at the RF port at f_{RF}
P_{IF} is the output power at the IF port at f_{IF}

Turn on power meter, signal generator and spectrum analyzer, wait 30 minutes to warm up.

1) Zero the power meter.
2) Calibrate power sensor.

Use power meter to measure cable attenuation.

To find the Conversion Losses, inject various levels of RF into the mixer’s R and L port. Measure the IF levels from the output port. Vary the LO levels between +6 and +11 dBm at frequencies of 2642 and 2942 MHz. Vary RF levels between –10.0 and –17.0 dBm at frequencies of 2700 and 3000 MHz. Use Tables 1 and 2 to record the IF signals generated on the spectrum analyzer display.

Use Figure 1 to properly setup the mixer.

1) Set the center frequency to 57.5 MHz.
2) Set the frequency span to 25.0 MHz.
3) Set the amplitude Ref Lvl to 0.0 dBm.
4) Set LO power = +6.0 dBm and LO frequency = 2642 MHz.
5) Set RF power = -10.0 dBm and RF frequency = 2700 MHz.
6) Record measurements of Spectrum analyzer display in Table 1 and Table 2.
7) Add attenuation and cable losses to measured values to determine correct values.
8) Repeat steps 5 – 8 but change LO levels and frequencies according to the tables.

Conversion Loss Test

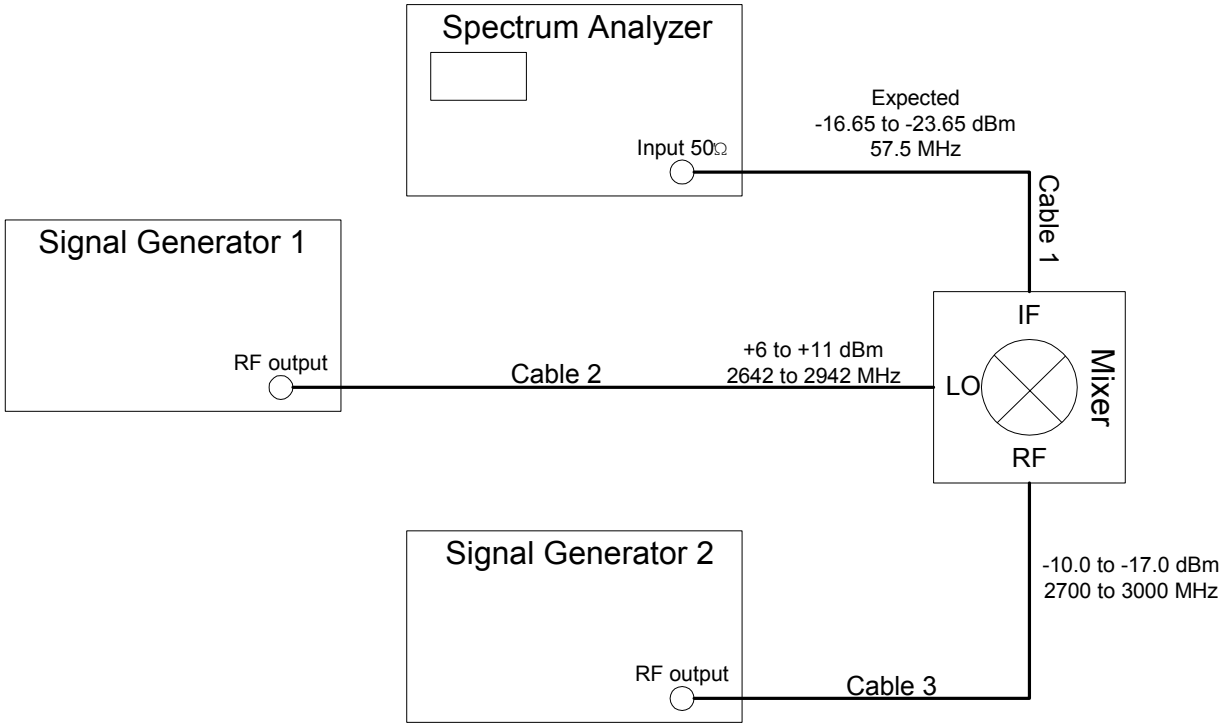

Figure 1

LO (dBm)	LO (MHz)	RF (dBm)	RF (MHz)	Expected IF (dBm)	Expected IF (MHz)	Measured IF (dBm)	Corrected[1] IF (dBm)	Measured IF (MHz)	Conversion[2] Loss (dB)
6.00	2642	-10.00	2700	-16.65 ± 0.2	57.5 ± 2.0	-17.33	-16.33	57.92	6.33
6.00	2642	-11.00	2700	-17.65 ± 0.2	57.5 ± 2.0	-18.33	-17.33	57.92	6.33
6.00	2642	-12.00	2700	-18.65 ± 0.2	57.5 ± 2.0	-19.17	-18.17	58.00	6.17
6.00	2642	-13.00	2700	-19.65 ± 0.2	57.5 ± 2.0	-20.17	-19.17	58.00	6.17
6.00	2642	-14.00	2700	-20.65 ± 0.2	57.5 ± 2.0	-21.17	-20.17	57.92	6.17
6.00	2642	-15.00	2700	-21.65 ± 0.2	57.5 ± 2.0	-22.00	-21.00	57.92	6.00
6.00	2642	-16.00	2700	-22.65 ± 0.2	57.5 ± 2.0	-23.00	-22.00	57.92	6.00
6.00	2642	-17.00	2700	-23.65 ± 0.2	57.5 ± 2.0	-23.83	-22.83	57.92	5.83
7.00	2642	-10.00	2700	-16.65 ± 0.2	57.5 ± 2.0	-17.17	-16.17	57.92	6.17
7.00	2642	-11.00	2700	-17.65 ± 0.2	57.5 ± 2.0	-18.17	-17.17	57.92	6.17
7.00	2642	-12.00	2700	-18.65 ± 0.2	57.5 ± 2.0	-19.00	-18.00	57.92	6.00
7.00	2642	-13.00	2700	-19.65 ± 0.2	57.5 ± 2.0	-20.00	-19.00	57.92	6.00
7.00	2642	-14.00	2700	-20.65 ± 0.2	57.5 ± 2.0	-21.00	-20.00	57.92	6.00
7.00	2642	-15.00	2700	-21.65 ± 0.2	57.5 ± 2.0	-21.83	-20.83	57.92	5.83
7.00	2642	-16.00	2700	-22.65 ± 0.2	57.5 ± 2.0	-22.83	-21.83	57.92	5.83

[1] Corrected IF = Measured IF + cable losses
[2] Conversion loss = RF – Corrected IF

LO (dBm)	LO (MHz)	RF (dBm)	RF (MHz)	Expected IF (dBm)	Expected IF (MHz)	Measured IF (dBm)	Corrected[1] IF (dBm)	Measured IF (MHz)	Conversion[2] Loss (dB)
7.00	2642	-17.00	2700	-23.65 ± 0.2	57.5 ± 2.0	-23.83	-22.83	58.00	5.83
8.00	2642	-10.00	2700	-16.65 ± 0.2	57.5 ± 2.0	-17.00	-16.00	57.92	6.00
8.00	2642	-11.00	2700	-17.65 ± 0.2	57.5 ± 2.0	-18.00	-17.00	57.92	6.00
8.00	2642	-12.00	2700	-18.65 ± 0.2	57.5 ± 2.0	-19.00	-18.00	57.92	6.00
8.00	2642	-13.00	2700	-19.65 ± 0.2	57.5 ± 2.0	-20.00	-19.00	57.92	6.00
8.00	2642	-14.00	2700	-20.65 ± 0.2	57.5 ± 2.0	-21.00	-20.00	57.92	6.00
8.00	2642	-15.00	2700	-21.65 ± 0.2	57.5 ± 2.0	-21.83	-20.83	57.92	5.83
8.00	2642	-16.00	2700	-22.65 ± 0.2	57.5 ± 2.0	-22.67	-21.67	57.92	5.67
8.00	2642	-17.00	2700	-23.65 ± 0.2	57.5 ± 2.0	-23.67	-22.67	57.92	5.67
9.00	2642	-10.00	2700	-16.65 ± 0.2	57.5 ± 2.0	-16.83	-15.83	58.00	5.83
9.00	2642	-11.00	2700	-17.65 ± 0.2	57.5 ± 2.0	-18.00	-17.00	57.92	6.00
9.00	2642	-12.00	2700	-18.65 ± 0.2	57.5 ± 2.0	-19.00	-18.00	57.92	6.00
9.00	2642	-13.00	2700	-19.65 ± 0.2	57.5 ± 2.0	-19.83	-18.83	57.92	5.83
9.00	2642	-14.00	2700	-20.65 ± 0.2	57.5 ± 2.0	-20.83	-19.83	57.92	5.83
9.00	2642	-15.00	2700	-21.65 ± 0.2	57.5 ± 2.0	-21.67	-20.67	57.92	5.67
9.00	2642	-16.00	2700	-22.65 ± 0.2	57.5 ± 2.0	-22.67	-21.67	57.92	5.67
9.00	2642	-17.00	2700	-23.65 ± 0.2	57.5 ± 2.0	-23.67	-22.67	57.92	5.67

LO (dBm)	LO (MHz)	RF (dBm)	RF (MHz)	Expected IF (dBm)	Expected IF (MHz)	Measured IF (dBm)	Corrected[1] IF (dBm)	Measured IF (MHz)	Conversion[2] Loss (dB)
10.00	2642	-10.00	2700	-16.65 ± 0.2	57.5 ± 2.0	-16.83	-15.83	57.92	5.83
10.00	2642	-11.00	2700	-17.65 ± 0.2	57.5 ± 2.0	-17.83	-16.83	57.92	5.83
10.00	2642	-12.00	2700	-18.65 ± 0.2	57.5 ± 2.0	-18.83	-17.83	57.92	5.83
10.00	2642	-13.00	2700	-19.65 ± 0.2	57.5 ± 2.0	-19.83	-18.83	57.92	5.83
10.00	2642	-14.00	2700	-20.65 ± 0.2	57.5 ± 2.0	-20.83	-19.83	57.92	5.83
10.00	2642	-15.00	2700	-21.65 ± 0.2	57.5 ± 2.0	-21.67	-20.67	57.92	5.67
10.00	2642	-16.00	2700	-22.65 ± 0.2	57.5 ± 2.0	-22.50	-21.50	57.92	5.50
10.00	2642	-17.00	2700	-23.65 ± 0.2	57.5 ± 2.0	-23.50	-22.50	57.92	5.50
11.00	2642	-10.00	2700	-16.65 ± 0.2	57.5 ± 2.0	-16.83	-15.83	57.92	5.83
11.00	2642	-11.00	2700	-17.65 ± 0.2	57.5 ± 2.0	-17.83	-16.83	57.92	5.83
11.00	2642	-12.00	2700	-18.65 ± 0.2	57.5 ± 2.0	-18.83	-17.83	57.92	5.83
11.00	2642	-13.00	2700	-19.65 ± 0.2	57.5 ± 2.0	-19.67	-18.67	57.92	5.67
11.00	2642	-14.00	2700	-20.65 ± 0.2	57.5 ± 2.0	-20.67	-19.67	57.92	5.67
11.00	2642	-15.00	2700	-21.65 ± 0.2	57.5 ± 2.0	-21.50	-20.50	57.92	5.50
11.00	2642	-16.00	2700	-22.65 ± 0.2	57.5 ± 2.0	-22.50	-21.50	57.92	5.50
11.00	2642	-17.00	2700	-23.65 ± 0.2	57.5 ± 2.0	-23.33	-22.33	57.92	5.33

Table 1: Conversion Loss Test LO 2642 MHz
Expected Conversion Loss: 6.65 dB
Cable losses: 1.00 dB

LO (dBm)	LO (MHz)	RF (dBm)	RF (MHz)	Expected IF (dBm)	Expected IF (MHz)	Measured IF (dBm)	Corrected[1] IF (dBm)	Measured IF (MHz)	Conversion[2] Loss (dB)
6.00	2942	-10.00	3000	-16.65 ± 0.2	57.5 ± 2.0	-18.00	-16.69	57.92	6.69
6.00	2942	-11.00	3000	-17.65 ± 0.2	57.5 ± 2.0	-19.00	-17.69	57.92	6.69
6.00	2942	-12.00	3000	-18.65 ± 0.2	57.5 ± 2.0	-19.83	-18.52	57.92	6.52
6.00	2942	-13.00	3000	-19.65 ± 0.2	57.5 ± 2.0	-20.83	-19.52	57.92	6.52
6.00	2942	-14.00	3000	-20.65 ± 0.2	57.5 ± 2.0	-21.83	-20.52	57.92	6.52
6.00	2942	-15.00	3000	-21.65 ± 0.2	57.5 ± 2.0	-22.83	-21.52	57.92	6.52
6.00	2942	-16.00	3000	-22.65 ± 0.2	57.5 ± 2.0	-23.83	-22.52	57.92	6.52
6.00	2942	-17.00	3000	-23.65 ± 0.2	57.5 ± 2.0	-24.67	-23.36	57.92	6.36
7.00	2942	-10.00	3000	-16.65 ± 0.2	57.5 ± 2.0	-17.83	-16.52	57.92	6.52
7.00	2942	-11.00	3000	-17.65 ± 0.2	57.5 ± 2.0	-18.83	-17.52	57.92	6.52
7.00	2942	-12.00	3000	-18.65 ± 0.2	57.5 ± 2.0	-19.83	-18.52	57.92	6.52
7.00	2942	-13.00	3000	-19.65 ± 0.2	57.5 ± 2.0	-20.67	-19.36	57.92	6.36
7.00	2942	-14.00	3000	-20.65 ± 0.2	57.5 ± 2.0	-21.67	-20.36	57.92	6.36
7.00	2942	-15.00	3000	-21.65 ± 0.2	57.5 ± 2.0	-22.67	-21.36	57.92	6.36
7.00	2942	-16.00	3000	-22.65 ± 0.2	57.5 ± 2.0	-23.67	-22.36	57.92	6.36

[1] Corrected IF = Measured IF + (attenuation and cable losses)
[2] Conversion Loss = Corrected IF - RF

LO (dBm)	LO (MHz)	RF (dBm)	RF (MHz)	Expected IF (dBm)	Expected IF (MHz)	Measured IF (dBm)	Corrected[1] IF (dBm)	Measured IF (MHz)	Conversion[2] Loss (dB)
7.00	2942	-17.00	3000	-23.65 ± 0.2	57.5 ± 2.0	-24.67	-23.36	57.92	6.36
8.00	2942	-10.00	3000	-16.65 ± 0.2	57.5 ± 2.0	-17.67	-16.36	57.92	6.36
8.00	2942	-11.00	3000	-17.65 ± 0.2	57.5 ± 2.0	-18.67	-17.36	57.92	6.36
8.00	2942	-12.00	3000	-18.65 ± 0.2	57.5 ± 2.0	-19.67	-18.36	57.92	6.36
8.00	2942	-13.00	3000	-19.65 ± 0.2	57.5 ± 2.0	-20.50	-19.19	57.92	6.19
8.00	2942	-14.00	3000	-20.65 ± 0.2	57.5 ± 2.0	-21.50	-20.19	57.92	6.19
8.00	2942	-15.00	3000	-21.65 ± 0.2	57.5 ± 2.0	-22.67	-21.36	57.92	6.36
8.00	2942	-16.00	3000	-22.65 ± 0.2	57.5 ± 2.0	-23.50	-22.19	57.92	6.19
8.00	2942	-17.00	3000	-23.65 ± 0.2	57.5 ± 2.0	-24.50	-23.19	57.92	6.19
9.00	2942	-10.00	3000	-16.65 ± 0.2	57.5 ± 2.0	-17.67	-16.36	57.92	6.36
9.00	2942	-11.00	3000	-17.65 ± 0.2	57.5 ± 2.0	-18.50	-17.19	57.92	6.19
9.00	2942	-12.00	3000	-18.65 ± 0.2	57.5 ± 2.0	-19.50	-18.19	57.92	6.19
9.00	2942	-13.00	3000	-19.65 ± 0.2	57.5 ± 2.0	-20.50	-19.19	57.92	6.19
9.00	2942	-14.00	3000	-20.65 ± 0.2	57.5 ± 2.0	-21.50	-20.19	57.92	6.19
9.00	2942	-15.00	3000	-21.65 ± 0.2	57.5 ± 2.0	-22.50	-21.19	57.92	6.19
9.00	2942	-16.00	3000	-22.65 ± 0.2	57.5 ± 2.0	-23.50	-22.19	57.92	6.19
9.00	2942	-17.00	3000	-23.65 ± 0.2	57.5 ± 2.0	-24.33	-23.02	57.92	6.02

LO (dBm)	LO (MHz)	RF (dBm)	RF (MHz)	Expected IF (dBm)	Expected IF (MHz)	Measured IF (dBm)	Corrected[1] IF (dBm)	Measured IF (MHz)	Conversion[2] Loss (dB)
10.00	2942	-10.00	3000	-16.65 ± 0.2	57.5 ± 2.0	-17.50	-16.19	57.92	6.19
10.00	2942	-11.00	3000	-17.65 ± 0.2	57.5 ± 2.0	-18.50	-17.19	57.92	6.19
10.00	2942	-12.00	3000	-18.65 ± 0.2	57.5 ± 2.0	-19.50	-18.19	57.92	6.19
10.00	2942	-13.00	3000	-19.65 ± 0.2	57.5 ± 2.0	-20.33	-19.02	57.92	6.02
10.00	2942	-14.00	3000	-20.65 ± 0.2	57.5 ± 2.0	-21.33	-20.02	57.92	6.02
10.00	2942	-15.00	3000	-21.65 ± 0.2	57.5 ± 2.0	-22.50	-21.19	57.92	6.19
10.00	2942	-16.00	3000	-22.65 ± 0.2	57.5 ± 2.0	-23.33	-22.02	57.92	6.02
10.00	2942	-17.00	3000	-23.65 ± 0.2	57.5 ± 2.0	-24.33	-23.02	57.92	6.02
11.00	2942	-10.00	3000	-16.65 ± 0.2	57.5 ± 2.0	-17.50	-16.19	57.92	6.19
11.00	2942	-11.00	3000	-17.65 ± 0.2	57.5 ± 2.0	-18.33	-17.02	58.00	6.02
11.00	2942	-12.00	3000	-18.65 ± 0.2	57.5 ± 2.0	-19.33	-18.02	57.92	6.02
11.00	2942	-13.00	3000	-19.65 ± 0.2	57.5 ± 2.0	-20.33	-19.02	57.92	6.02
11.00	2942	-14.00	3000	-20.65 ± 0.2	57.5 ± 2.0	-21.33	-20.02	57.92	6.02
11.00	2942	-15.00	3000	-21.65 ± 0.2	57.5 ± 2.0	-22.33	-21.02	57.92	6.02
11.00	2942	-16.00	3000	-22.65 ± 0.2	57.5 ± 2.0	-23.33	-22.02	57.92	6.02
11.00	2942	-17.00	3000	-23.65 ± 0.2	57.5 ± 2.0	-24.33	-23.02	57.92	6.02

Table 2: Conversion Loss Test LO 2942 MHz
Expected Conversion Loss: 6.65 dB
Cable losses: 1.31 dB

Isolation loss

Isolation $Loss_{LO/RF}$ (dB) = 10 log P_{LO} – 10 log $P_{LO/RF}$
Where P_{LO} is the LO power incident at the LO port at f_{LO}
$P_{LO/RF}$ is the output power at the RF port at f_{LO}

Isolation $Loss_{LO/IF}$ (dB) = 10 log P_{LO} – 10 log $P_{LO/IF}$
Where P_{LO} is the LO power incident at the LO port at f_{LO}
$P_{LO/IF}$ is the output power at the IF port at f_{LO}

LO/RF isolation loss

To determine the Isolation $Loss_{LO/RF}$, measure the LO signal from the mixer's RF port. Vary the LO levels between +6 and +11 dBm at frequencies of 2642 and 2942 MHz. Use Table 3 to record the RF signals generated on the power meter.
Use the Agilent 8648D signal generator as the source for the LO signals.

1) Terminate IF port with 50 ohm terminator.
2) Setup mixer as shown in Figure 2 to connect RF port to power meter to measure LO/RF isolation.
3) Set the LO level = 6.0 dBm and LO frequency = 2642 MHz..
4) Record measurements in Table 3.
5) Add attenuation and cable losses to measured values to determine correct values.
6) Repeat steps 1 – 4 but change LO levels and frequencies according to Table 3.

LO/IF isolation loss

To determine the Isolation $Loss_{LO/IF}$, measure the LO signal from the mixer's IF port. Vary the LO levels between +6 and +11 dBm at frequencies of 2642 and 2942 MHz. Use Table 4 to record the IF signals generated on the power meter display.
Use the Agilent 8648D signal generator as the source for the LO signals.

1) Terminate RF port with 50 ohm terminator.
2) Setup mixer as shown in Figure 3 to connect IF port to power meter to measure LO/IF isolation.
3) Set the LO power = 6.0 dBm and LO frequency = 2642 MHz.
4) Record measurements in Table 4.
5) Add attenuation and cable losses to measured values to determine correct values.
6) Repeat steps 1 – 4 but change LO levels and frequencies according to Table 4.

IF Mixer Conversion Test

To determine the path losses from the mixer, 6 dB directional coupler and 20 dB attenuator, use two signal generators to simulate the STALO and transmitter RF signals. Signal generator 1 will represent the STALO signal while signal generator 2 will represent the transmitter signal coming from the 4-way splitter. Measure the mixer's IF signal with a spectrum analyzer. This signal

represents the signal going to the IFD J2 port. Measure the directional coupler OUT signal with a power meter. This signal represents the STALO signal feeding into the IF mixer/preamp J2.

1) Setup mixer, directional coupler, and 20 dB attenuator as shown in Figure 4.
2) Set signal generator 1 to output = 13.0 dBm and frequency = 2642 MHz.
3) Set signal generator 2 to output = 6.0 dBm and frequency = 2700 MHz
4) Record measurements in Table 4.
5) Add attenuation and cable losses to measured values to determine correct values.

Repeat steps 1 – 4 but change output levels and frequencies according to Tables 4 and 5.

LO/RF Isolation Loss Test

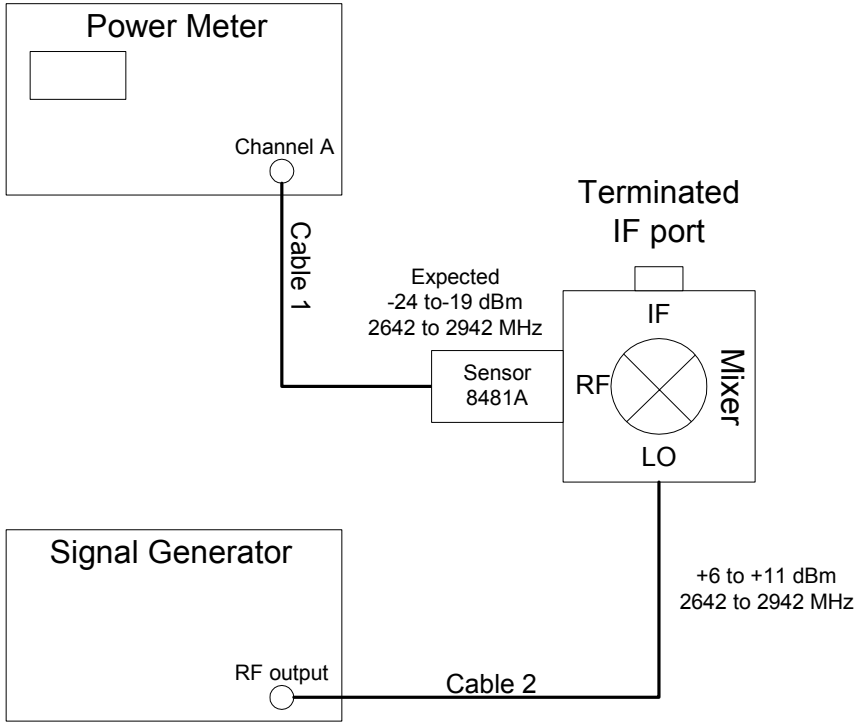

Figure 2

LO/IF Isolation Loss Test

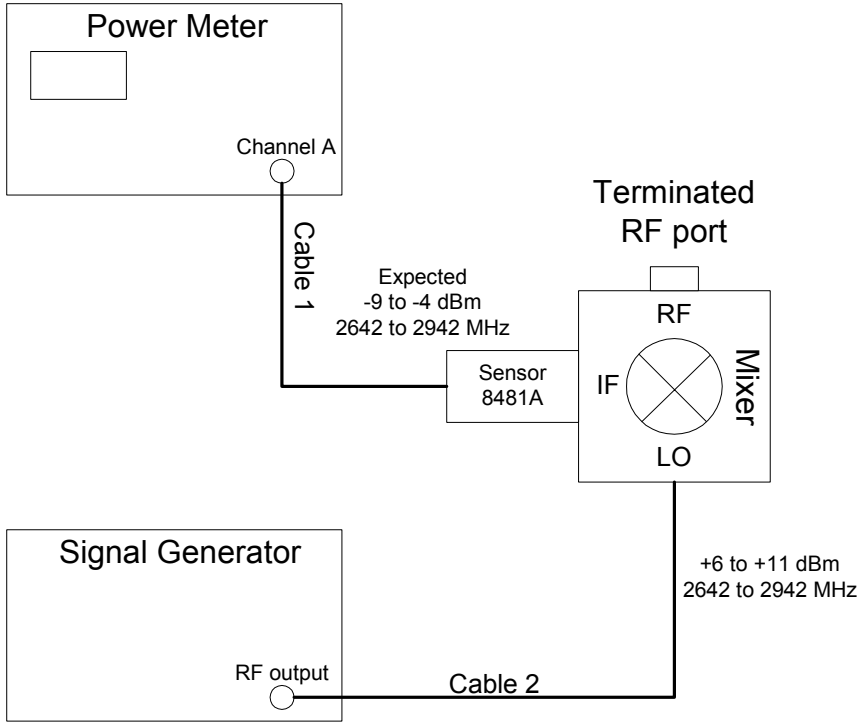

Figure 3

Conversion Loss Test

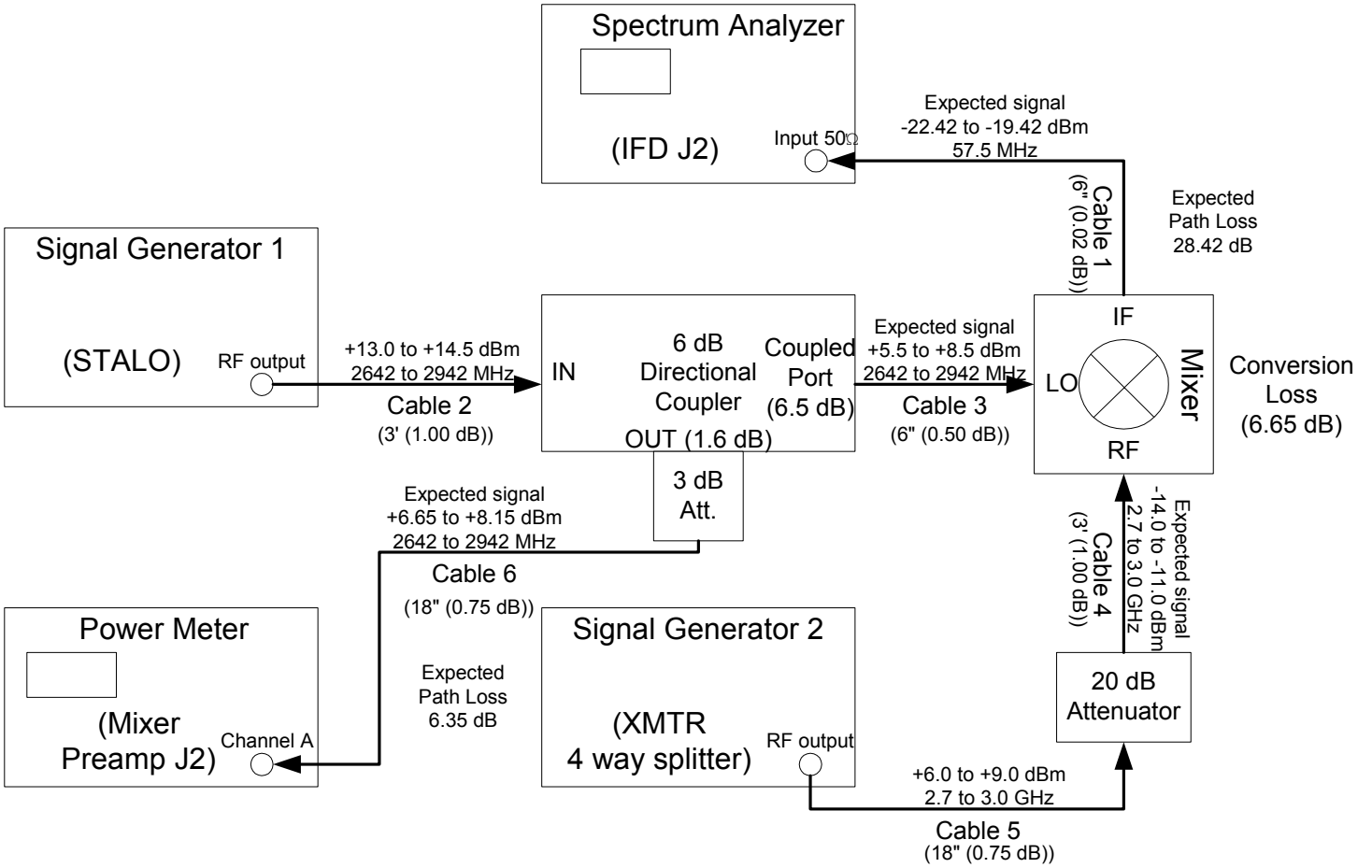

Figure 4

(X.XX dB) denotes attenuation

LO (dBm)	LO (MHz)	Expected LO/RF (dB)	Measured RF (dBm)	Corrected[3] RF (dBm)	Corrected[4] LO/RF (dB)
6.0	2642	30.00	-25.67	-24.84	30.84
6.0	2942	30.00	-22.83	-22.19	28.19
7.0	2642	30.00	-25.50	-24.72	31.72
7.0	2942	30.00	-22.83	-22.19	29.19
8.0	2642	30.00	-25.50	-24.72	32.72
8.0	2942	30.00	-22.83	-22.19	30.19
9.0	2642	30.00	-25.33	-24.55	33.55
9.0	2942	30.00	-22.83	-22.19	31.19
10.0	2642	30.00	-25.00	-24.22	34.22
10.0	2942	30.00	-22.83	-22.19	32.19
11.0	2642	30.00	-24.83	-24.05	35.05
11.0	2942	30.00	-23.00	-22.36	33.36

Table 3: LO/RF Isolation Test
Expected LO/RF Isolation Loss: 30 $\pm$ 5.0 dB
Cable losses: 0.78 dB at 2642
0.64 dB at 2942

[3] Corrected RF = Measured RF + (attenuation and cable losses)
[4] Corrected LO/RF = LO – Corrected RF

LO (dBm)	LO (MHz)	Expected LO/IF (dB)	Measured IF (dBm)	Corrected[5] IF (dBm)	Corrected[6] LO/IF (dB)
6.0	2642	15.00	-14.33	-13.55	19.55
6.0	2942	15.00	-13.67	-13.03	19.03
7.0	2642	15.00	-13.33	-12.55	19.55
7.0	2942	15.00	-12.50	-11.86	18.86
8.0	2642	15.00	-12.33	-11.55	19.55
8.0	2942	15.00	-11.50	-10.86	18.86
9.0	2642	15.00	-11.33	-10.55	19.55
9.0	2942	15.00	-10.50	-9.86	18.86
10.0	2642	15.00	-10.50	-9.72	19.72
10.0	2942	15.00	-9.67	-9.03	19.03
11.0	2642	15.00	-9.50	-8.72	19.72
11.0	2942	15.00	-8.50	-7.86	18.86

Table 4: LO/IF Isolation Loss Test
Expected LO/IF Isolation Loss: 15 $\pm$ 2.5 dB
Cable losses: 0.78 at 2642 MHz
0.64 at 2942 MHz

[5] Corrected IF = Measured IF + (attenuation and cable losses)
[6] Corrected LO/IF = LO - Corrected IF

Signal Generator 1 (dBm)	Signal Generator 2 (dBm)	Expected Mixer IF (MHz)	Measured Mixer IF (MHz)	Expected Mixer IF (dBm)	Measured Mixer IF (dBm)	Expected Coupler OUT (dBm)	Measured Coupler OUT (dBm)
6.0	13.0	57.5	57.96	-22.42	-21.33	6.65	7.37
7.0	13.0	57.5	57.96	-21.42	-20.33	6.65	7.37
8.0	13.0	57.5	57.96	-20.42	-19.33	6.65	7.37
9.0	13.0	57.5	57.96	-19.42	-18.33	6.65	7.37
6.0	13.5	57.5	57.96	-22.42	-21.33	7.15	7.86
7.0	13.5	57.5	57.96	-21.42	-20.33	7.15	7.86
8.0	13.5	57.5	57.96	-20.42	-19.17	7.15	7.86
9.0	13.5	57.5	57.96	-19.42	-18.17	7.15	7.86
6.0	14.0	57.5	57.96	-22.42	-21.17	7.65	8.35
7.0	14.0	57.5	57.96	-21.42	-20.17	7.65	8.35
8.0	14.0	57.5	57.96	-20.42	-19.17	7.65	8.35
9.0	14.0	57.5	57.96	-19.42	-18.17	7.65	8.35
6.0	14.5	57.5	57.96	-22.42	-21.17	8.15	8.83
7.0	14.5	57.5	57.96	-21.42	-20.17	8.15	8.83
8.0	14.5	57.5	57.96	-20.42	-19.17	8.15	8.83
9.0	14.5	57.5	57.96	-19.42	-18.00	8.15	8.83

Table 5: Path Loss Test 2642 and 2700 MHz

Signal Generator 1 (dBm)	Signal Generator 2 (dBm)	Expected Mixer IF (MHz)	Measured Mixer IF (MHz)	Expected Mixer IF (dBm)	Measured Mixer IF (dBm)	Expected Coupler OUT (dBm)	Measured Coupler OUT (dBm)
6.0	13.0	57.5	57.96	-22.42	-22.17	6.65	7.12
7.0	13.0	57.5	57.96	-21.42	-21.17	6.65	7.12
8.0	13.0	57.5	57.96	-20.42	-20.17	6.65	7.12
9.0	13.0	57.5	57.96	-19.42	-19.17	6.65	7.12
6.0	13.5	57.5	57.96	-22.42	-22.17	7.15	7.63
7.0	13.5	57.5	57.96	-21.42	-21.17	7.15	7.63
8.0	13.5	57.5	57.96	-20.42	-20.17	7.15	7.63
9.0	13.5	57.5	57.96	-19.42	-19.17	7.15	7.63
6.0	14.0	57.5	57.96	-22.42	-22.17	7.65	8.13
7.0	14.0	57.5	57.96	-21.42	-21.17	7.65	8.13
8.0	14.0	57.5	57.96	-20.42	-20.00	7.65	8.13
9.0	14.0	57.5	57.96	-19.42	-19.00	7.65	8.13
6.0	14.5	57.5	57.96	-22.42	-22.00	8.15	8.64
7.0	14.5	57.5	57.96	-21.42	-21.00	8.15	8.64
8.0	14.5	57.5	57.96	-20.42	-20.00	8.15	8.64
9.0	14.5	57.5	57.96	-19.42	-19.00	8.15	8.64

Table 6: Path Loss Test 2942 and 3000 MHz

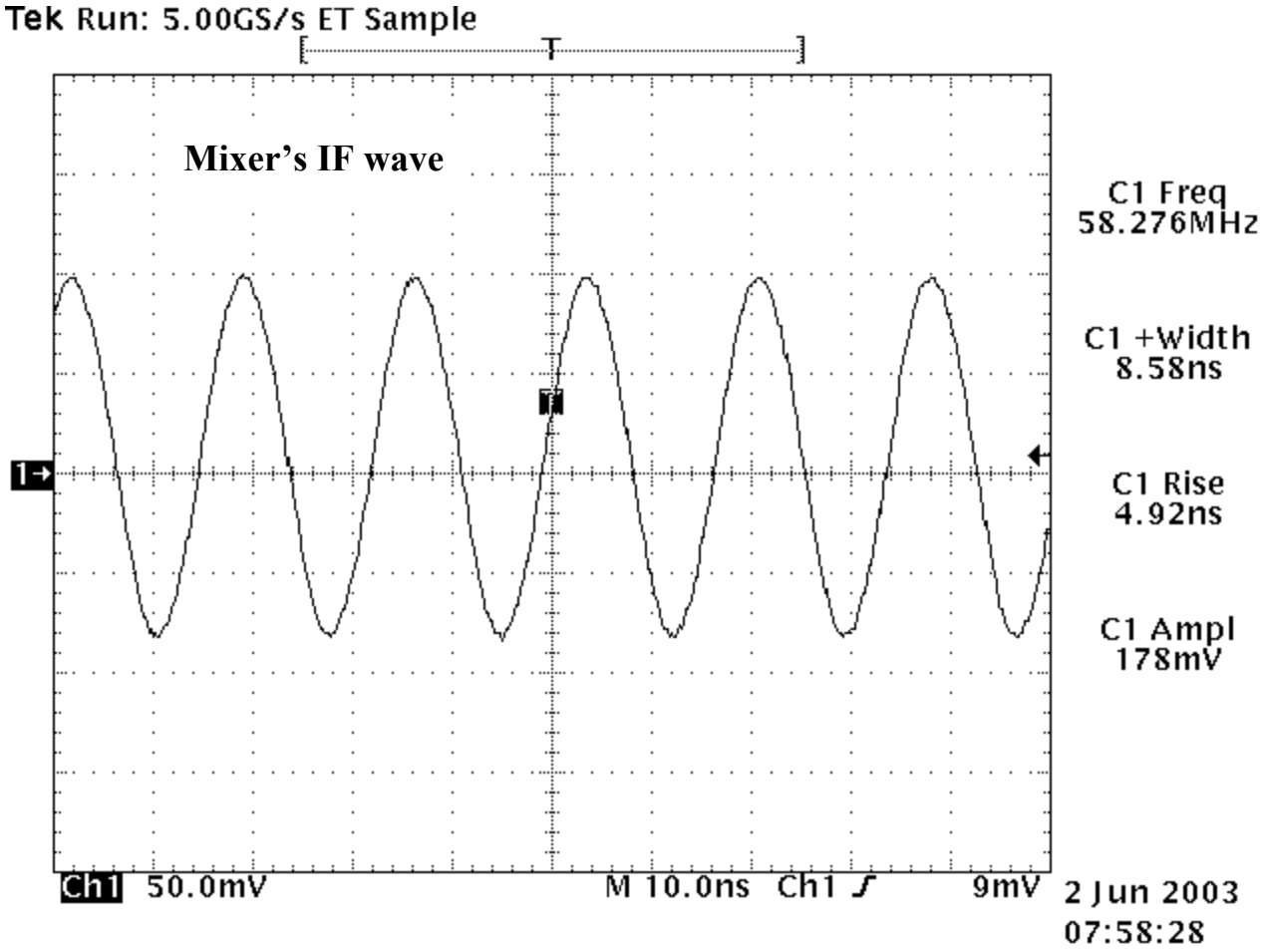
Tek Run: 5.00GS/s ET Sample
Mixer's IF wave
C1 Freq
58.276MHz
C1 +Width
8.58ns
C1 Rise
4.92ns
C1 Ampl
178mV
Ch1 50.0mV
M 10.0ns Ch1 ∫ 9mV
2 Jun 2003
07:58:28

Figure 5

Results

The tests results have shown the Mini-circuits ZEM-4300 mixer performs within the expected ranges for the RF circuit. The tests conditions were selected based upon actual field data.

Tables 1 and 2 show the mixer's conversion losses to be actually slight lower than the manufacturer's spec. sheet of 6.65 dB. Most of the conversion losses were near 6.0 dB, which is within the 1.0 dB tolerance. Tables 1 and 2 also show higher LO levels reduce the mixer's conversion losses. The IF frequencies are within 0.75 MHz of 57.5 MHz. The isolation losses are very close to the expected ranges. The LO/IF isolation losses were slightly out of range. However, the Mini-circuit's performance data sheet shows these values to be within tolerance.

The path loss test resulted in a higher OUT (STALO) signal than was expected. The path losses were calculated based upon cable losses and the attenuation from the RF components. The OUT signal represents the STALO from the RF generator. The directional coupler may be have a slightly lower conversion loss than expected. This would explain the higher OUT signal. The mixer's IF signal was within 1.5 dB of the expected values. As stated previously, higher LO levels will reduce the mixer's conversion loss. This can be seen in Table 5 and 6 as the signal generator 1 signal increases from 13.0 to 14.5 dBm. Figure 5 shows the IF continuous wave produced by the mixer. The CW appears to be very stable at 58.3 MHz.

The results from the mixer tests have shown that this mixer is acceptable to be used in the UD 4. Further tests will be done at KREX to determine how efficient the mixer reacts to actual RF signals.