Mini-Circuits
BWS3W2
BWS6W2
BWS20W2
3, 6, 20 dB Attenuators
Tests

Test procedure

Mini-Circuits Attenuators

Model No.	Frequency Range (MHz)	Attenuation (dB)	VSWR	Avg. Input Power Max. (W)
BW-S3W2	DC - 18000	3.0 ± 0.4	1.25	2
BW-S6W2	DC - 18000	6.0 ± 0.4	1.25	2
BW-S20W2	DC - 18000	20.0 ± 0.4	1.25	2

Equipment List

Item	MFG.	Part Number	Notes
Power meter	Agilent	E4418B	Single channel
3 dB attenuator	Mini-Circuits	BW-S3W2	3 dB
6 dB attenuator	Mini-Circuits	BW-S6W2	6 dB
20 dB attenuator	Mini-Circuits	BW-S20W2	20 dB
Universal adapter kit	Pomona	5698	Adapter kit
Signal generator	Agilent	8648D	9 kHz to 4 GHz
Power sensor	Agilent	8481A	-30 dBm to +20 dBm

Note: Use properly rated power series sensor. Using incorrect rated power sensor could damage sensor.

Duty cycle = PRF X Pulse width = 10 log (1013.5 Hz X 1.52 microseconds) = -28.12 dB

Turn on power meter, signal generator and spectrum analyzer, wait 30 minutes to warm up.

1) Zero the power meter.
2) Calibrate power sensor.

To find the attenuation value, inject various levels of RF into the input port. Measure the RF levels from the output port. Vary the LO levels between -20 and +10 dBm at frequencies of 57.5, 2700, 2850, and 3000 MHz. Use Tables 1, 2, and 3 to record the RF signals generated on the power meter display.

Use power meter to measure cables and connectors attenuation at different frequencies (57.5, 2700, 2850, and 3000 MHz). Record results in Tables 1,2, and 3.

Use Figure 1 to properly setup the attenuator.

1) Set LO level = -20.0 dBm and LO frequency = 57.5 MHz.
2) Record measurements of power meter display in Table 1.
3) Add cable losses to measured values to determine correct values.
4) Repeat steps 1 – 3 for each rated attenuator, but change LO levels and frequencies according to the tables.

Attenuation Test

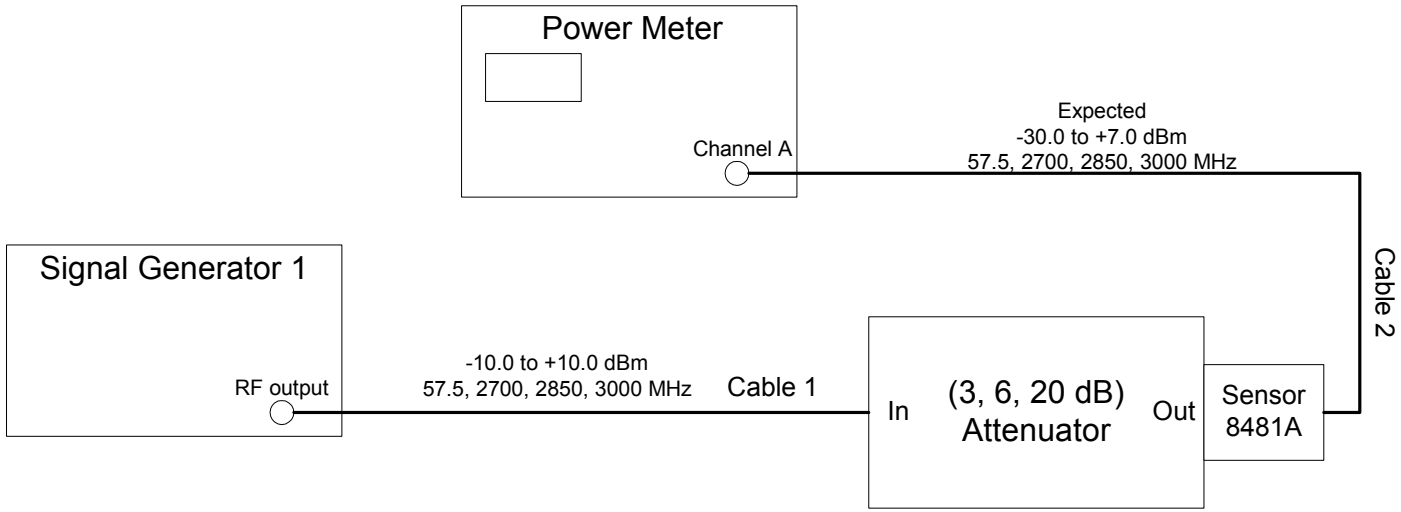

Figure 1

LO (dBm)	LO (MHz)	Attenuator value (dB)	Expected RF (dBm)	Measured RF (dBm)	Corrected[1] RF (dBm)	Attenuation[2] (dB)
-20.00	57.5	3.00 ± 0.40	-23.00 ± 0.40	-22.80	-22.77	-2.77
-10.00	57.5	3.00 ± 0.40	-13.00 ± 0.40	-12.80	-12.77	-2.77
-5.00	57.5	3.00 ± 0.40	-8.00 ± 0.40	-7.86	-7.83	-2.83
0.00	57.5	3.00 ± 0.40	-3.00 ± 0.40	-2.77	-2.74	-2.74
5.00	57.5	3.00 ± 0.40	2.00 ± 0.40	2.23	2.26	-2.74
10.00	57.5	3.00 ± 0.40	7.00 ± 0.40	7.19	7.22	-2.78

Table 1: 3 dB attenuator

Expected Attenuation: 3.0 ± 0.4 dB

Cable 1 and Cable 2 loss (57.5 MHz) _____-0.03 dB.

[1] Corrected RF = Measured RF + cable losses
[2] Attenuation = Corrected RF - LO

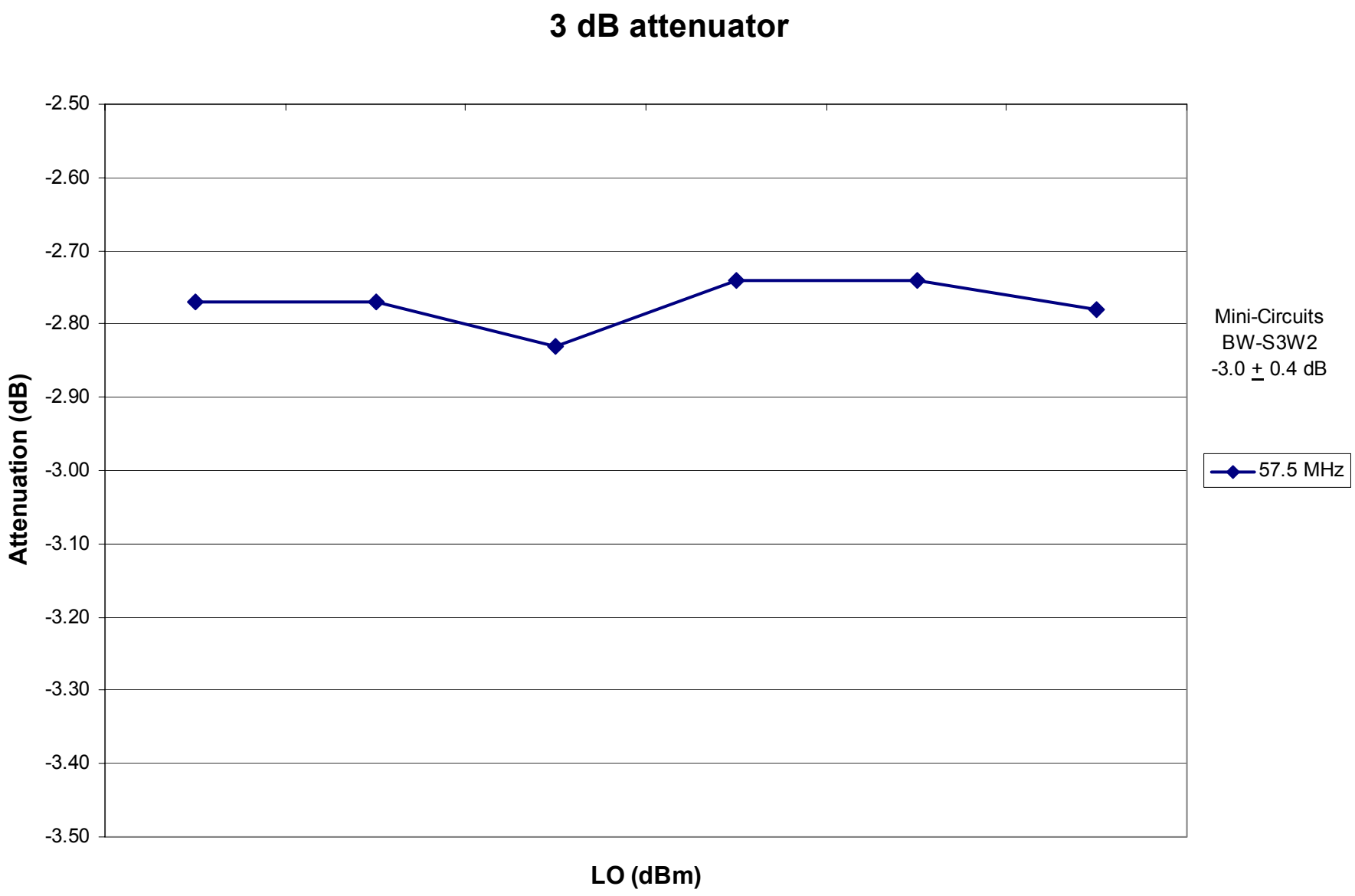
3 dB attenuator
-2.50
-2.60
-2.70
-2.80
-2.90
-3.00
-3.10
-3.20
-3.30
-3.40
-3.50
Attenuation (dB)
LO (dBm)
Mini-Circuits
BW-S3W2
-3.0 ± 0.4 dB
57.5 MHz

Figure 2

LO (dBm)	LO (MHz)	Attenuator value (dB)	Expected RF (dBm)	Measured RF (dBm)	Corrected[1] RF (dBm)	Attenuation[2] (dB)
-10.00	57.5	6.00 ± 0.40	-16.00 ± 0.40	-15.89	-15.86	-5.86
-5.00	57.5	6.00 ± 0.40	-11.00 ± 0.40	-10.95	-10.92	-5.92
0.00	57.5	6.00 ± 0.40	-6.00 ± 0.40	-5.84	-5.81	-5.81
5.00	57.5	6.00 ± 0.40	-1.00 ± 0.40	-0.86	-0.83	-5.83
10.00	57.5	6.00 ± 0.40	4.00 ± 0.40	4.11	4.14	-5.86

Table 2: 6 dB attenuator

Expected Attenuation: 6.0 ± 0.4 dB

Cable 1 and Cable 2 loss (57.5 MHz) _____-0.03_____ dB.

[1] Corrected RF = Measured RF + cable losses
[2] Attenuation = Corrected RF - LO

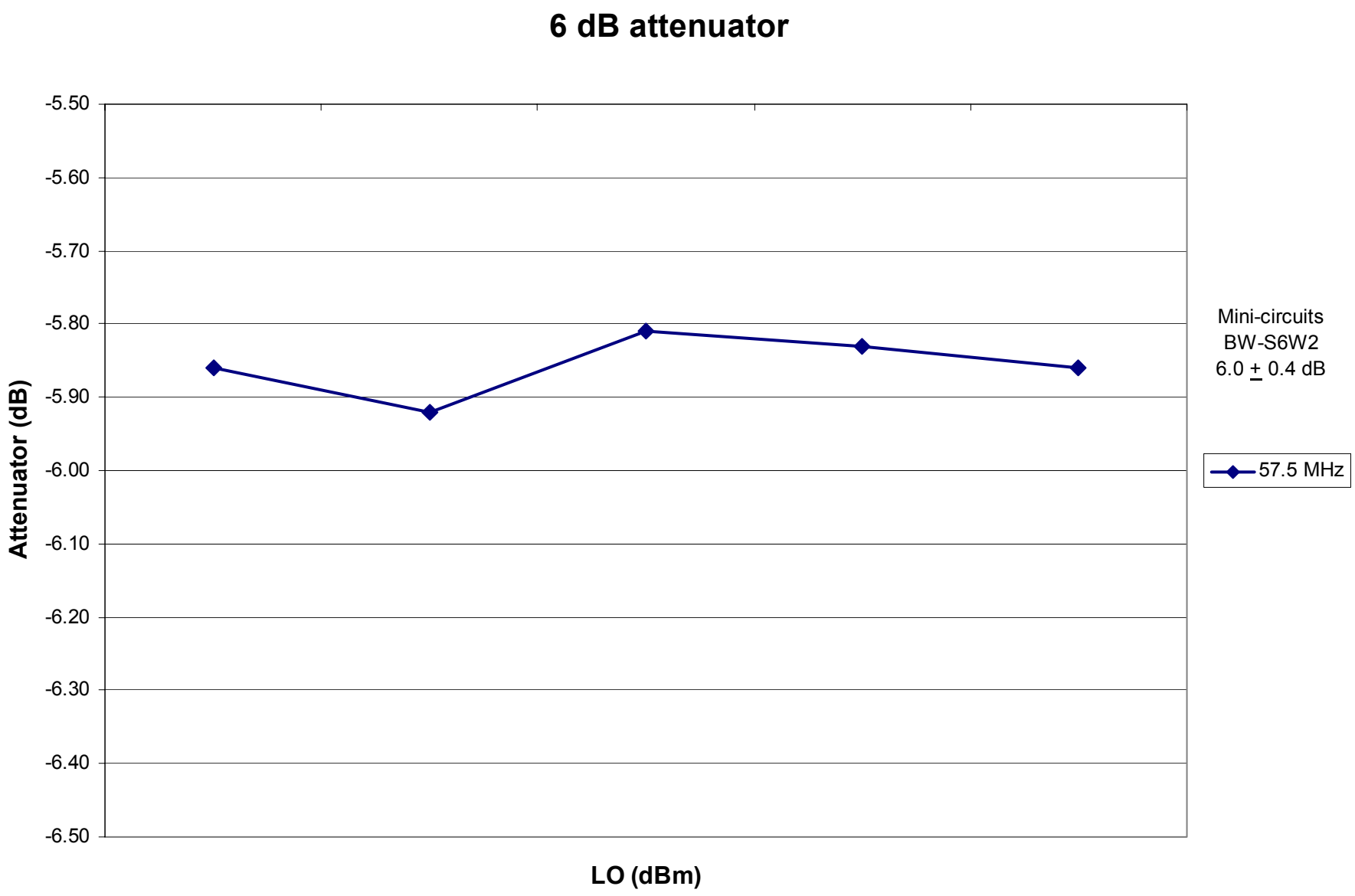
6 dB attenuator
-5.50
-5.60
-5.70
-5.80
-5.90
-6.00
-6.10
-6.20
-6.30
-6.40
-6.50
Attenuator (dB)
LO (dBm)
Mini-circuits
BW-S6W2
6.0 ± 0.4 dB
57.5 MHz

Figure 3

LO (dBm)	LO (MHz)	Attenuator value (dB)	Expected RF (dBm)	Measured RF (dBm)	Corrected[1] RF (dBm)	Attenuation[2] (dB)
0.00	57.5	20.00 ± 0.40	-20.00 ± 0.40	-19.97	-19.95	-19.95
0.00	2700	20.00 ± 0.40	-20.00 ± 0.40	-20.37	-20.03	-20.03
0.00	2850	20.00 ± 0.40	-20.00 ± 0.40	-20.48	-20.07	-20.07
0.00	3000	20.00 ± 0.40	-20.00 ± 0.40	-20.28	-20.05	-20.05
5.00	57.5	20.00 ± 0.40	-15.00 ± 0.40	-14.98	-14.96	-19.96
5.00	2700	20.00 ± 0.40	-15.00 ± 0.40	-15.36	-15.02	-20.02
5.00	2850	20.00 ± 0.40	-15.00 ± 0.40	-15.47	-15.06	-20.06
5.00	3000	20.00 ± 0.40	-15.00 ± 0.40	-15.27	-15.04	-20.04
10.00	57.5	20.00 ± 0.40	-10.00 ± 0.40	-10.02	-10.00	-20.00
10.00	2700	20.00 ± 0.40	-10.00 ± 0.40	-10.35	-10.01	-20.01
10.00	2850	20.00 ± 0.40	-10.00 ± 0.40	-10.49	-10.07	-20.07
10.00	3000	20.00 ± 0.40	-10.00 ± 0.40	-10.27	-10.04	-20.04
14.00	57.5	20.00 ± 0.40	-6.00 ± 0.40	-6.03	-6.01	-20.01
14.00	2700	20.00 ± 0.40	-6.00 ± 0.40	-6.39	-6.05	-20.05
14.00	2850	20.00 ± 0.40	-6.00 ± 0.40	-6.52	-6.11	-20.11
14.00	3000	20.00 ± 0.40	-6.00 ± 0.40	-6.29	-6.06	-20.06

Table 3: 20 dB attenuator

Expected Attenuation: 20.0 ± 0.4 dB

Cable 1 and Cable 2 loss (57.5 MHz) -0.02 dB.
Cable 1 and Cable 2 loss (2700 MHz) -0.34 dB.
Cable 1 and Cable 2 loss (2850 MHz) -0.41 dB.
Cable 1 and Cable 2 loss (3000 MHz) -0.23 dB.

[1] Corrected RF = Measured RF + cable losses
[2] Attenuation = Corrected RF - LO

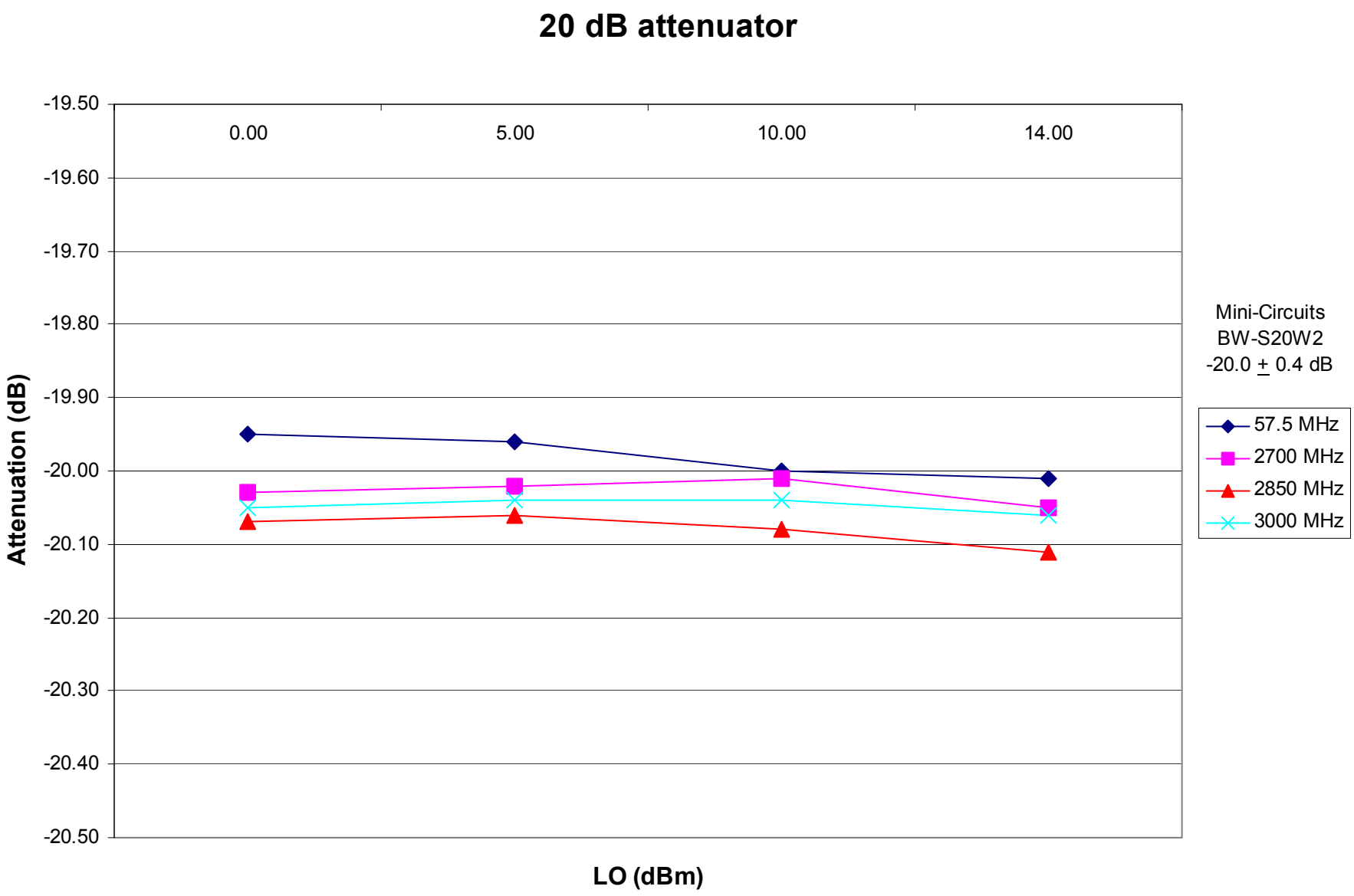
20 dB attenuator
-19.50
-19.60
-19.70
-19.80
-19.90
-20.00
-20.10
-20.20
-20.30
-20.40
-20.50
0.00
5.00
10.00
14.00
Attenuation (dB)
LO (dBm)
Mini-Circuits
BW-S20W2
-20.0 ± 0.4 dB
57.5 MHz
2700 MHz
2850 MHz
3000 MHz

Figure 4

Results

The test results have shown that each rated attenuator is within its respective tolerances. Figures 2, 3 and 4 plot each attenuator's value vs. different power levels. Each figure shows the consistency of each attenuator's rated value over different frequencies and power levels. The frequencies and power levels were selected to emulate the actual field conditions.